Syndeo by Tagra | Joinery | Surface & Recessed Puck Light | White | 2700K

SYN-27K-PL-WHT / ITM002445



Datasheet

23-10-2026

www.tagra-lighting.co.uk

support@tagra-lighting.co.uk

Syndeo by Tagra | Joinery | Surface & Recessed Puck Light | White | 2700K



Beam Angle	IP Rating	Mounting	Voltage In	Warranty
95°	IP20	Recess	24V	5 Years

SKU: SYN-27K-PL-WHT

ITM: ITM002445

Key Features:

- **Body Colour:** White
- **Available Colour:** 2700K
- **Dimensions (W x H x L):** 55 x 19 x 70mm

Mechanical Data			
Body Colour:	White	**LED Chip Type:**	COB
Product Weight:	2g	**Dimensions (LxWxH):**	70 x 55 x 19mm

Electrical Data			
Constant Voltage / Constant Current:	CV	**Wattage:**	3W

Input Data			
Input Current Type:	DC	**Input Voltage:**	24V

Control Data	
Dimmable:	Yes

Photometric Data			
Beam Angle:	95°	**CCT:**	2700K

Photometric Data			
Colour Type:	Single Colour	**CRI:**	90
Lumen Total:	350Lm	**SDCM:**	<3

Environmental Data			
Application Environment:	Furniture, Cabinetry, Retail, Commercial	**Body Finish:**	White
Body Material:	Aluminium	**Ingress Protection (IP):**	IP20
Mounting Type:	Recessed		

Dimension Drawing

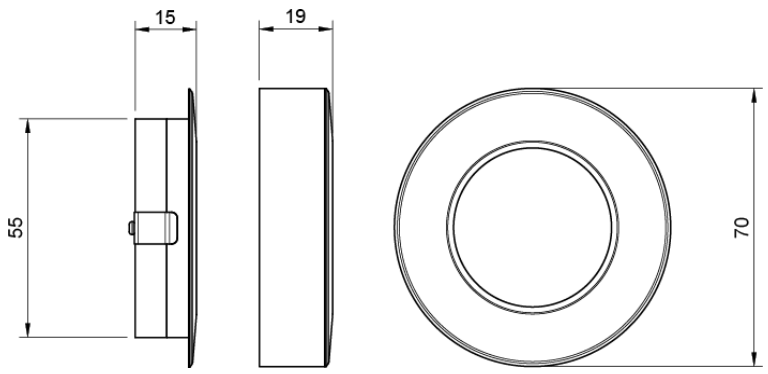

Packaging Data	
Items / Sets Per Pack:	1

Disclaimer

Tagra Lighting have taken reasonable care to ensure that the information in this datasheet is accurate at time of publication however it should be noted that all specifications are subject to tolerance. Descriptive specifications such as colour are subjective. Tagra Lighting reserve the right to update specifications without notice. The information in the datasheet may only be relied on by customers of Tagra Lighting in accordance with applicable terms and conditions.

Tagra Lighting is a trading name of T.R Ventures Limited, a company incorporated in England with registered number 07757720. Our registered office is Unit 2, Southfield Industrial Estate, Trafford Park, M17 1SJ.

www.tagra-lighting.co.uk

support@tagra-lighting.co.uk